90°

PE100

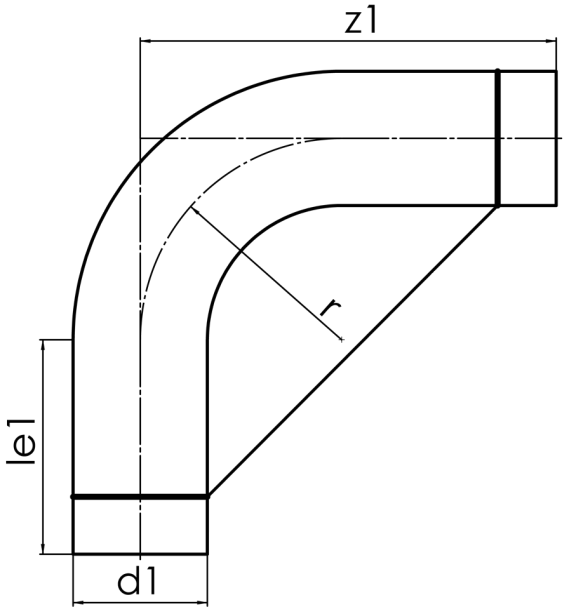

SDR 17

	d1 [mm]	le1* [mm]	z1 [mm]	r [mm]	kg
41905091	90	150	330	225	0,77

© STAR Piping Systems GmbH