90°

PE100

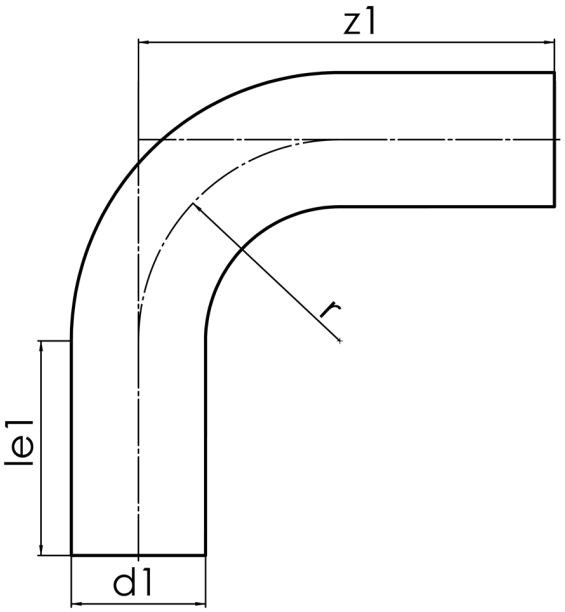

SDR 17

	d1 [mm]	le1* [mm]	z1 [mm]	r [mm]	kg
41900111	110	150	350	165	1,28

© STAR Piping Systems GmbH