60°

PE100

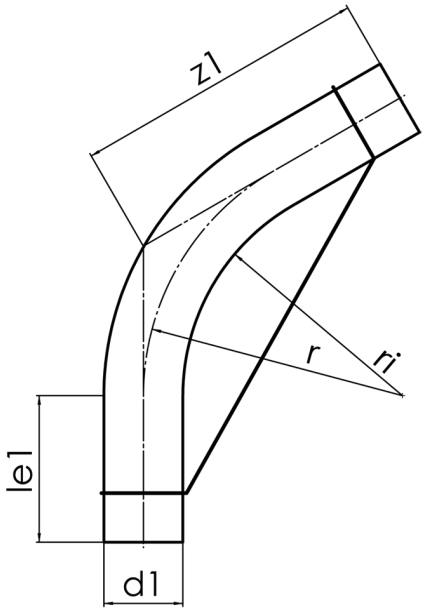

SDR 17

	d1 [mm]	le1* [mm]	z1 [mm]	r [mm]	kg
41606121	125	150	600	763	3,03

© STAR Piping Systems GmbH