60°

PE100

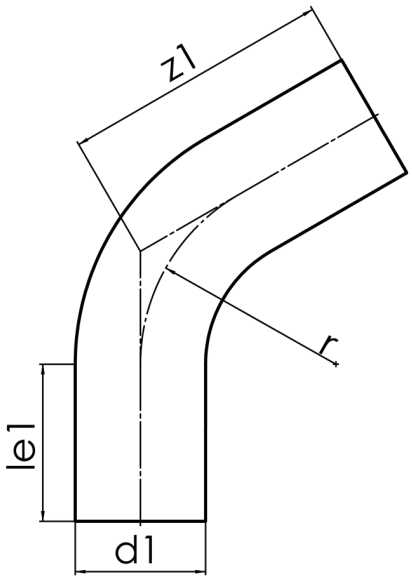

SDR 17

	d1 [mm]	le1* [mm]	z1 [mm]	r [mm]	kg
41600631	630	350	1200	955	132,29

© STAR Piping Systems GmbH