60°

PE100

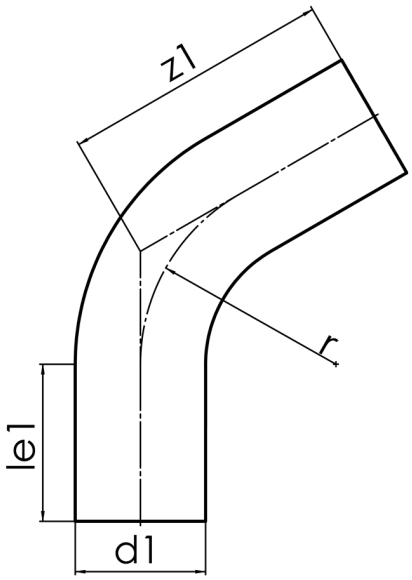

SDR 17

	d1 [mm]	le1* [mm]	z1 [mm]	r [mm]	kg
41600281	280	250	580	420	14,35

© STAR Piping Systems GmbH