45°

PE100

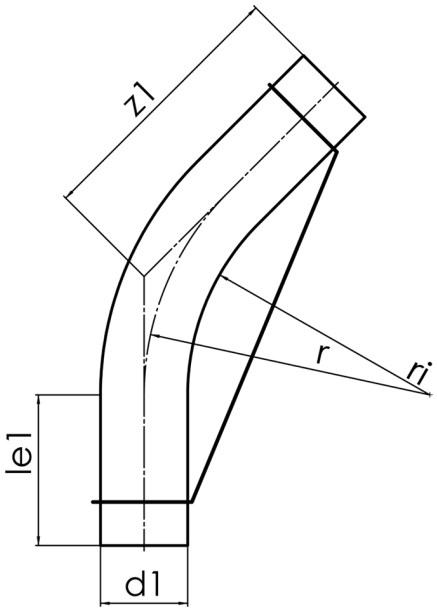

SDR 11

	d1 [mm]	le1* [mm]	z1 [mm]	r [mm]	kg
41408222	225	150	2340	1863	23,56

© STAR Piping Systems GmbH