45°

PE100

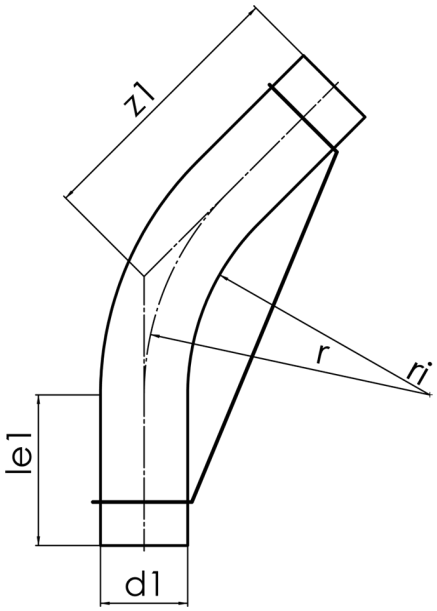

SDR 11

	d1 [mm]	le1* [mm]	z1 [mm]	r [mm]	kg
41407092	90	150	750	1145	2,54

© STAR Piping Systems GmbH