45°

PE100

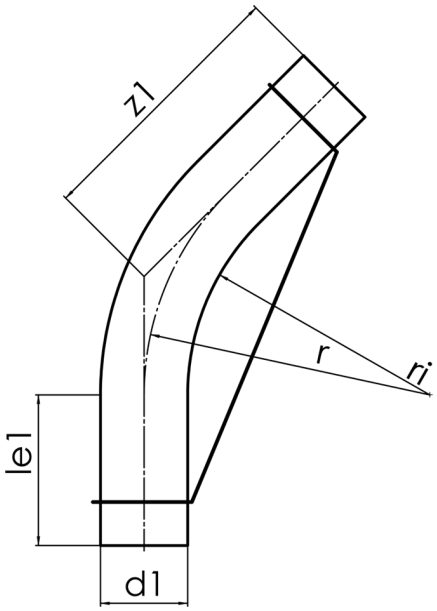

SDR 17

	d1 [mm]	le1* [mm]	z1 [mm]	r [mm]	kg
41406141	140	150	550	770	3,25

© STAR Piping Systems GmbH