90°

PE100-RC

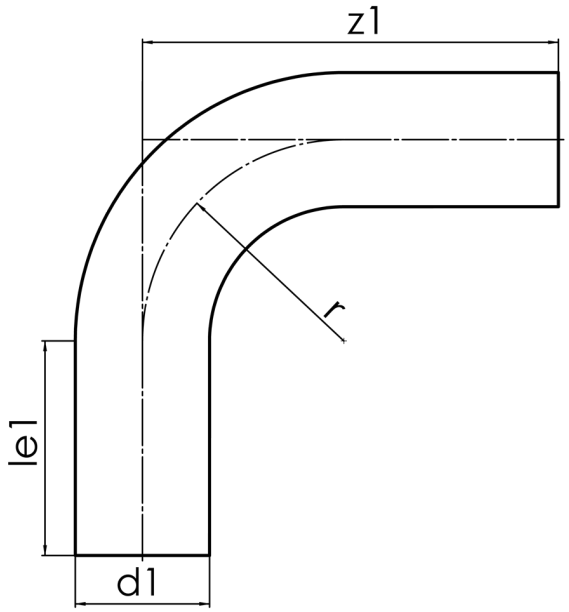

SDR 17

	d1 [mm]	le1* [mm]	z1 [mm]	r [mm]	kg
31904351	355	300	1000	560	35,32

© STAR Piping Systems GmbH